Dell™ Latitude™ D620 Service Manual

Before You Begin
System Components
Media Bay Devices
Hard Drive
Hinge Cover
Keyboard
Memory
Display Assembly
Internal Card with Bluetooth® Wireless Technology
Communications Cards
Coin-Cell Battery
Palm Rest
Modem
Processor Thermal-Cooling Assembly
Processor Module
Speaker
Microphone
PC Card Reader
System Board
Fan
Base
Flashing the BIOS

Model PP18L

Notes, Notices, and Cautions

NOTE: A NOTE indicates important information that helps you make better use of your computer.

NOTICE: A NOTICE indicates either potential damage to hardware or loss of data and tells you how to avoid the problem.

CAUTION: A CAUTION indicates a potential for property damage, personal injury, or death.

Information in this document is subject to change without notice.
© 2006 Dell Inc. All rights reserved.

Reproduction in any manner whatsoever without the written permission of Dell Inc. is strictly forbidden.

Trademarks used in this text: *Dell*, the *DELL* logo, and *Latitude* are trademarks of Dell Inc.; *Microsoft* and *Windows* are registered trademarks of Microsoft Corporation; *Bluetooth* is a registered trademark owned by Bluetooth SIG, Inc. and is used by Dell under license;

Other trademarks and trade names may be used in this document to refer to either the entities claiming the marks and names or their products. Dell Inc. disclaims any proprietary interest in trademarks and trade names other than its own.

November 2006 Rev. A01

Back to Contents Page

Base

Dell™ Latitude™ D620 Service Manual

CAUTION: Before performing the following procedures, follow the safety instructions in the *Product Information Guide*.

CAUTION: To prevent static damage to components inside your computer, discharge static electricity from your body before you touch any of your computer's electronic components. You can do so by touching an unpainted metal surface.

1. Follow the instructions in Before Working Inside Your Computer.
2. Remove the hard drive (see Hard Drive).
3. Remove any installed media bay device (see Media Bay Devices).
4. Remove the memory module(s) (see Memory).
5. Remove any installed wireless communications cards (see Communications Cards).
6. Remove the processor thermal-cooling assembly (see Processor Thermal-Cooling Assembly).
7. Remove the processor (see Processor Module).
8. Remove the hinge cover (see Hinge Cover).
9. Remove the keyboard (see Keyboard).
10. Remove the display assembly (see Display Assembly).
11. Remove the palm rest (see Palm Rest).
12. Remove the modem (see Modem).
13. Remove the speaker (see Speaker).
14. Disconnect the fan power cable from the system board.
15. Remove the system board (see System Board).
16. Remove the fan (see Fan).

NOTE: If the base has the improved K-Lock, the K-Lock is held down with a screw. Remove and discard the screw when installing this base, as the screw is not needed.

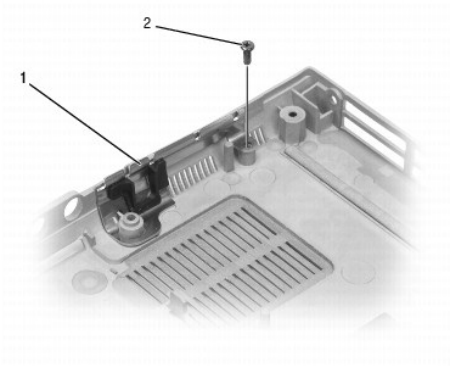

1	base with K-Lock assembly	2	screw

Back to Contents Page

Back to Contents Page

Before You Begin

Dell™ Latitude™ D620 Service Manual

- Recommended Tools
- Turning Off Your Computer
- Before Working Inside Your Computer
- Computer Orientation
- Screw Identification

This chapter provides procedures for removing and installing the components in your computer. Unless otherwise noted, each procedure assumes that the following conditions exist:

- You have performed the steps in Turning Off Your Computer and Before Working Inside Your Computer.
- You have read the safety information in the *Product Information Guide.*
- A component can be replaced by performing the removal procedure in reverse order.

Recommended Tools

The procedures in this document may require the following tools:

- Small flat-blade screwdriver
- #1 Phillips screwdriver
- Small plastic scribe
- 5-mm hex nut driver
- Flash BIOS-update program CD

Turning Off Your Computer

NOTICE: To avoid losing data, save and close any open files and exit any open programs before you turn off your computer.

1. Shut down the operating system:
   a. Save and close any open files and exit any open programs
   b. Click **Start**→ **Shut Down**→ **Shut down**.

   The computer turns off after the operating system shutdown process finishes.

2. Ensure that the computer and any attached devices are turned off. If your computer and attached devices do not automatically turn off when you shut down your operating system, press and hold the power button for 4 seconds.

Before Working Inside Your Computer

Use the following safety guidelines to help protect your computer from potential damage and to help ensure your own personal safety.

CAUTION: Before you begin any of the procedures in this section, follow the safety instructions in the *Product Information Guide*.

CAUTION: Handle components and cards with care. Do not touch the components or contacts on a card. Hold a card by its edges or by its metal mounting bracket. Hold a component such as a processor by its edges, not by its pins.

NOTICE: Only a certified service technician should perform repairs on your computer. Damage due to servicing that is not authorized by Dell is not covered by your warranty.

NOTICE: When you disconnect a cable, pull on its connector or on its pull-tab, not on the cable itself. Some cables have a connector with locking tabs; if you are disconnecting this type of cable, press in on the locking tabs before you disconnect the cable. As you pull connectors apart, keep them evenly aligned to avoid bending any connector pins. Also, before you connect a cable, ensure that both connectors are correctly oriented and aligned.

NOTICE: To avoid damaging the computer, perform the following steps before you begin working inside the computer.

1. Ensure that the work surface is flat and clean to prevent the computer cover from being scratched.

2. Turn off your computer (see Turning Off Your Computer).

NOTICE: To disconnect a network cable, first unplug the cable from your computer and then unplug it from the network device.

3. Disconnect any telephone, network, and USB cables from the computer.

4. Disconnect your computer and all attached devices from their electrical outlets.

5. Turn over the computer.

NOTICE: To avoid damaging the system board, you must remove the main battery before you service the computer.

6. Remove the battery:
   a. Slide the two battery-bay latch releases on the bottom of the computer toward the sides of the computer until they are engaged.
   b. Grasp the battery by the battery tab and slide the battery horizontally toward the front of the computer.
   c. Lift to remove the battery from the bay.

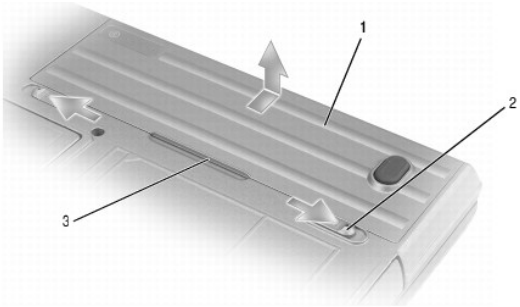

1	battery	2	battery-bay latch release	3	battery tab

7. Press the power button to ground the system board.

8. Remove any installed ExpressCards from the ExpressCard slot.

Computer Orientation

1	front	2	left	3	back	4	right

Screw Identification

When you are removing and replacing components, print this section as a tool to lay out and keep track of the screws. The printout provides the number of screws and their sizes.

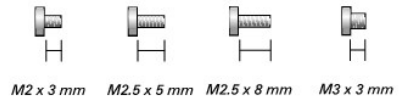

Optical Drive: (1 each) M2.5 x 8 mm **NOTE:** This screw is optional and might not be installed on the computer.	Fan Module: (4 each) M2.5 x 5 mm	Display Assembly to Computer Base: (4 each) M2.5 x 8 mm
Modem to System Board: (2 each) M2 x 3 mm	Display Bezel: (6 each) M2.5 x 5 mm	Display Panel: (8 each) M2 x 3 mm
Top of Palm Rest to Computer Base: (3 each) M2.5 x 5 mm	Base Plastics to Palm Rest From Bottom: (7 each) M2.5 x 8 mm	Hard Drive Carrier to Hard Drive: (2 each) M3 x 3 mm
Speaker to Base Plastics: (1 each) M2 x 3 mm	System Board to Base Plastics: (5 each, system board) M2.5 x 5 mm	Keyboard to Palm Rest: (3 each) M2.5 x 5 mm
Display Hinges to Top Cover: (2 each) M2.5 x 5 mm		

Back to Contents Page

Back to Contents Page

Flashing the BIOS

Dell™ Latitude™ D620 Service Manual

- Flashing the BIOS From a CD
- Flashing the BIOS From the Hard Drive

If a BIOS-update program CD is provided with the new system board, flash the BIOS from the CD. If you do not have a BIOS-update program CD, flash the BIOS from the hard drive.

Flashing the BIOS From a CD

1. Ensure that the AC adapter is plugged in and that the main battery is installed properly.

NOTE: If you use a BIOS-update program CD to flash the BIOS, set up the computer to boot from a CD before inserting the CD.

2. Insert the BIOS-update program CD, and restart the computer.

   Follow the instructions that appear on the screen. The computer continues to boot and updates the new BIOS. When the flash update is complete, the computer will automatically reboot.

3. Press <F2> during POST to enter the system setup program.

4. Press <Alt> and <F> to reset the computer defaults.

5. Press <Esc>, select **Save changes and reboot**, and press <Enter> to save configuration changes.

6. Remove the flash BIOS-update program CD from the drive and restart the computer.

Flashing the BIOS From the Hard Drive

1. Ensure that the AC adapter is plugged in, the main battery is properly installed, and a network cable is attached.

2. Turn on the computer.

3. Locate the latest BIOS update file for your computer at **support.dell.com**.

4. Click **Download Now** to download the file.

5. If the **Export Compliance Disclaimer** window appears, click **Yes, I Accept this Agreement**.

   The **File Download** window appears.

6. Click **Save this program to disk** and then click **OK**.

   The **Save In** window appears.

7. Click the down arrow to view the **Save In** menu, select **Desktop**, and then click **Save**.

   The file downloads to your desktop.

8. Click **Close** if the **Download Complete** window appears.

   The file icon appears on your desktop and is titled the same as the downloaded BIOS update file.

9. Double-click the file icon on the desktop and follow the instructions on the screen.

Back to Contents Page

Back to Contents Page

Internal Card with Bluetooth® Wireless Technology

Dell™ Latitude™ D620 Service Manual

CAUTION: Before performing the following procedures, follow the safety instructions in your *Product Information Guide*.

NOTICE: To avoid electrostatic discharge, ground yourself by using a wrist grounding strap or by periodically touching a connector on the back panel of the computer.

NOTICE: To avoid damaging the system board, you must remove the main battery before you begin working inside the computer.

If you ordered an internal card with Bluetooth wireless technology with your computer, it is already installed.

1. Follow the procedures in Before You Begin.
2. Remove the hinge cover (see Hinge Cover).
3. Gently pull left on the cable for the card with Bluetooth wireless technology.
4. When there is enough clearance between the right edge of the card and the card holder, insert a plastic scribe and pry the card to the left until it is released from the metal clip.

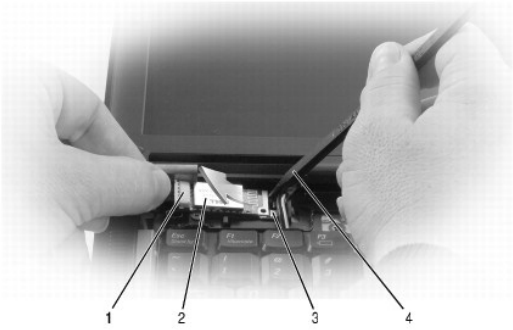

1	metal tab	2	card	3	card connector
4	card cable				

NOTICE: Be careful when removing the card to avoid damaging the card, card cable, or surrounding components.

5. Disconnect the card from the cable and remove the card from the computer.

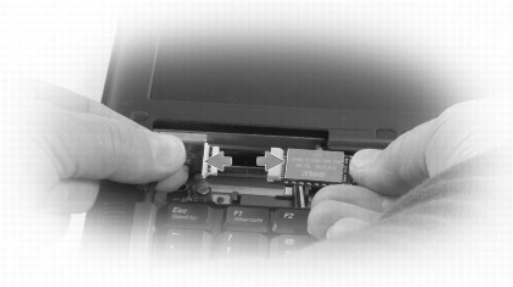

Back to Contents Page

Back to Contents Page

Coin-Cell Battery

Dell™ Latitude™ D620 Service Manual

CAUTION: Before performing the following procedures, follow the safety instructions in your *Product Information Guide*.

NOTICE: To avoid electrostatic discharge, ground yourself by using a wrist grounding strap or by periodically touching a connector on the back panel of the computer.

NOTICE: To avoid damaging the system board, you must remove the main battery before you begin working inside the computer.

1. Follow the procedures in Before You Begin.
2. Remove the hinge cover (see Hinge Cover).
3. Remove the keyboard (see Keyboard).

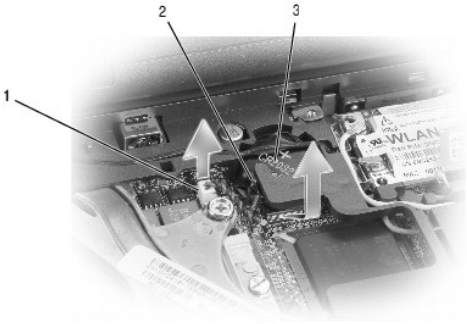

1	coin-cell battery connector	2	plastic mylar	3	coin-cell battery

4. Remove the coin-cell battery connector from the connector on the system board.
5. Being careful not to break the plastic, slightly raise the corner of the plastic mylar above the battery.
6. While holding the mylar, grasp the battery and pull out of the battery compartment.

Back to Contents Page

Back to Contents Page

Processor Module

Dell™ Latitude™ D620 Service Manual

- Removing the Processor Module
- Installing the Processor Module

Removing the Processor Module

CAUTION: Before performing the following procedures, follow the safety instructions in the *Product Information Guide*.

CAUTION: To prevent static damage to components inside your computer, discharge static electricity from your body before you touch any of your computer's electronic components. You can do so by touching an unpainted metal surface.

NOTICE: Press and hold the processor down by applying slight pressure to the center of the processor while turning the cam screw to prevent intermittent contact between the cam screw and processor.

NOTICE: To avoid damage to the processor, hold the screwdriver so that it is perpendicular to the processor when turning the cam screw.

1. Follow the instructions in Before Working Inside Your Computer.
2. Remove the hinge cover (see Hinge Cover).
3. Remove the optical drive (see Media Bay Devices).
4. Remove the keyboard (see Keyboard).
5. Remove the coin-cell battery (see Coin-Cell Battery).
6. Remove the palm rest (see Palm Rest).
7. Remove the processor thermal-cooling assembly (see Processor Thermal-Cooling Assembly).

NOTICE: When removing the processor module, pull the module straight up. Be careful not to bend the pins on the processor module.

8. To loosen the ZIF socket, use a small, flat-blade screwdriver and rotate the ZIF-socket cam screw counterclockwise until it comes to the cam stop.

   The ZIF-socket cam screw secures the processor to the system board. Take note of the arrow on the ZIF-socket cam screw.

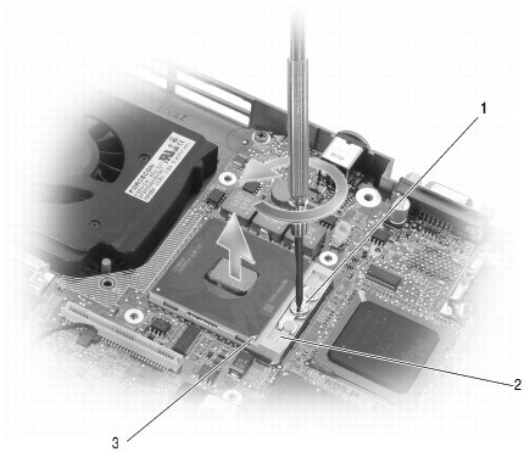

1	ZIF-socket cam screw	2	ZIF-socket	3	pin-1 corner of processor

9. Use a processor extraction tool to remove the processor module.

Installing the Processor Module

NOTICE: Ensure that the cam lock is in the fully open position before seating the processor module. Seating the processor module properly in the ZIF socket does not require force.

NOTICE: A processor module that is not properly seated can result in an intermittent connection or permanent damage to the processor and ZIF socket.

1. Align the pin-1 corner of the processor module so that it points to the triangle on the system board, and insert the processor module into the ZIF socket.

   When the processor module is correctly seated, all four corners are aligned at the same height. If one or more corners of the module are higher than the others, the module is not seated correctly.

NOTICE: Hold the processor down while turning the cam screw to prevent intermittent contact between the cam screw and processor.

2. Tighten the ZIF socket by turning the cam screw clockwise to secure the processor module to the system board.
3. Peel the backing off the thermal cooling pad and adhere the pad to the portion of the thermal-cooling assembly that covers the processor.
4. Replace the processor thermal-cooling assembly (see Processor Thermal-Cooling Assembly).
5. Replace the palm rest (see Palm Rest).
6. Replace the coin-cell battery (see Coin-Cell Battery).
7. Replace the keyboard (see Keyboard).
8. Replace the optical drive (see Media Bay Devices).
9. Replace the hinge cover (see Hinge Cover).
10. Replace the battery.
11. Update the BIOS using a flash BIOS-update program CD. See Flashing the BIOS From a CD.

Back to Contents Page

Back to Contents Page

Display Assembly

Dell™ Latitude™ D620 Service Manual

- Removing the Display Assembly
- Removing the Display Bezel
- Removing the Display Panel
- Installing the Display Panel
- Removing the Display Hinges

Removing the Display Assembly

CAUTION: Before performing the following procedures, follow the safety instructions in the *Product Information Guide*.

CAUTION: To prevent static damage to components inside your computer, discharge static electricity from your body before you touch any of your computer's electronic components. You can do so by touching an unpainted metal surface.

1. Follow the instructions in Before Working Inside Your Computer.
2. Remove the hinge cover (see Hinge Cover).
3. Remove the keyboard (see Keyboard).
4. Pull straight up on the pull-tab that is attached to the display-feed flex cable to disconnect the cable from the system board.
5. Disconnect the antenna cable(s).
6. Carefully remove the antenna cable and the display cables from their routing guides.
7. Close the display.
8. Turn the computer upside-down with the back of the computer facing you.
9. From the bottom of the computer, remove the two M2.5 x 8-mm screws labeled "D."

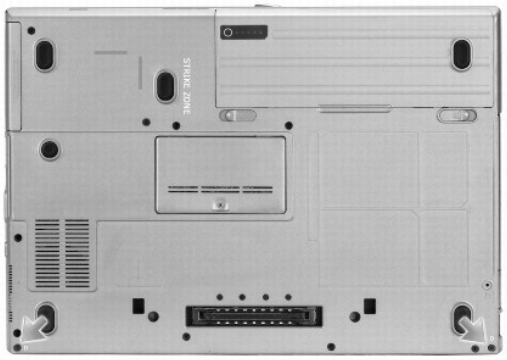

10. From the back of the computer, remove the two M2.5 x 8-mm screws.

11. Turn the computer right-side up and open the display.

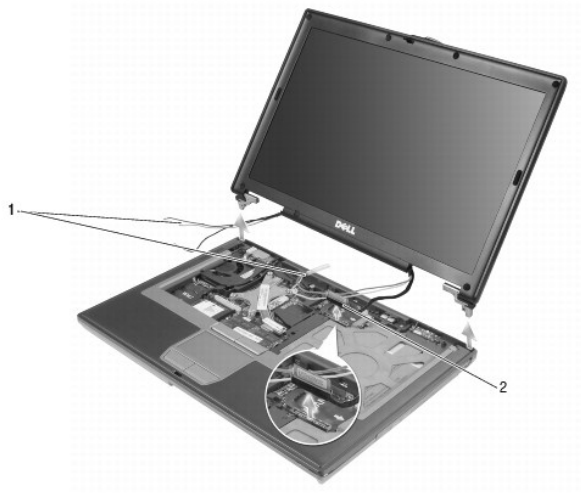

1	antenna cables	2	display cable		

12. Lift the display assembly out of the computer base.

Removing the Display Bezel

CAUTION: Before performing the following procedures, follow the safety instructions in the *Product Information Guide*.

CAUTION: To prevent static damage to components inside your computer, discharge static electricity from your body before you touch any of your computer's electronic components. You can do so by touching an unpainted metal surface.

1. Follow the instructions in Before Working Inside Your Computer.
2. Remove the display assembly (see Display Assembly).
3. Use a plastic scribe to pry the six circular screw covers/bumpers out of the screw holes on the front of the bezel.
4. Remove the six M2.5 x 5-mm screws from the front of the bezel.

NOTICE: Carefully separate the bezel from the top cover to avoid damage to the bezel.

5. Starting from the inside edges of bezel, use your fingers to pry the bezel upward and outward from the display panel.

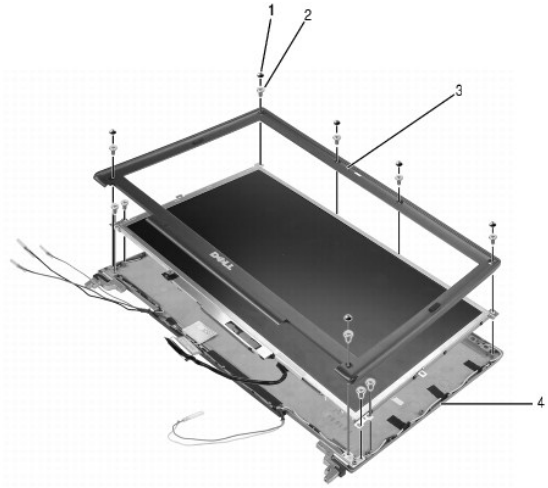

1	screw covers/display bumpers (6)	2	M2.5 x 5-mm screws (6)	3	display bezel
4	top cover				

Removing the Display Panel

CAUTION: Before performing the following procedures, follow the safety instructions in the *Product Information Guide*.

CAUTION: To prevent static damage to components inside your computer, discharge static electricity from your body before you touch any of your computer's electronic components. You can do so by touching an unpainted metal surface.

1. Follow the instructions in Before Working Inside Your Computer.
2. Remove the display assembly (see Display Assembly).
3. Remove the display bezel (see Removing the Display Bezel).
4. Remove the four M2 x 3-mm screws from each side of the display panel.
5. Lift the display panel out of the top cover.

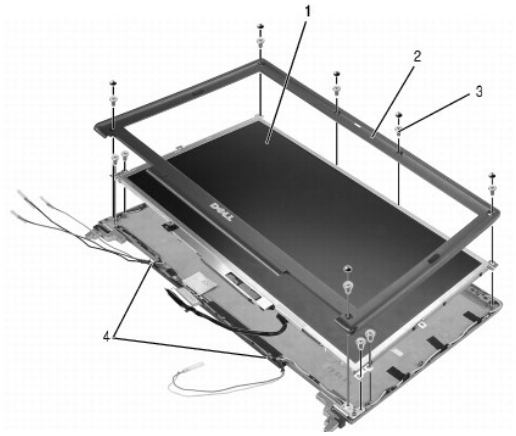

1	display panel	2	top cover	3	M2 x 3-mm screws (4)
4	notches for cable routing				

Installing the Display Panel

1. Replace the eight M2 x 3-mm screws that secure the display panel to the top cover.
2. Route the display-feed flex cable and antenna cables so that they rest in the notch located in the bottom edge of the top cover.
3. Replace the display bezel.

Removing the Display Hinges

CAUTION: Before performing the following procedures, follow the safety instructions in the *Product Information Guide*.

CAUTION: To prevent static damage to components inside your computer, discharge static electricity from your body before you touch any of your computer's electronic components. You can do so by touching an unpainted metal surface.

1. Follow the instructions in Before Working Inside Your Computer.
2. Remove the display assembly (see Display Assembly).
3. Remove the display bezel (see Removing the Display Bezel).
4. Remove the display Panel (see Removing the Display Panel).
5. Remove the M2.5 x 5-mm screw from the right display hinge.
6. Lift the right display hinge off the two alignment pins and out of the top cover.
7. Repeat step 5 and step 6 for the left display hinge.

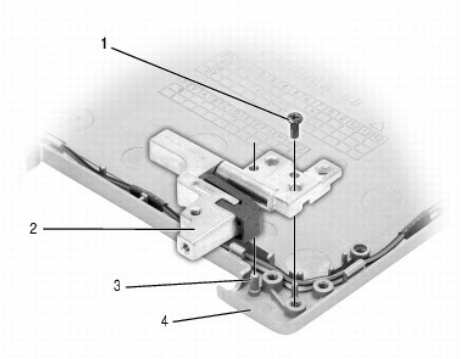

1	M2.5 x 5-mm screw	2	right display hinge	3	alignment pins (2)
4	top cover				

Back to Contents Page

Back to Contents Page

Fan

Dell™ Latitude™ D620 Service Manual

CAUTION: Before performing the following procedures, follow the safety instructions in the *Product Information Guide*.

CAUTION: To prevent static damage to components inside your computer, discharge static electricity from your body before you touch any of your computer's electronic components. You can do so by touching an unpainted metal surface.

1. Follow the instructions in Before Working Inside Your Computer.
2. Remove the hard drive (see Hard Drive).
3. Remove any installed media bay device (see Media Bay Devices).
4. Remove the memory module(s) (see Memory).
5. Remove any installed wireless communications cards (see Communications Cards).
6. Remove the processor thermal-cooling assembly (see Processor Thermal-Cooling Assembly).
7. Remove the processor (see Processor Module).
8. Remove the hinge cover (see Hinge Cover).
9. Remove the keyboard (see Keyboard).
10. Remove the display assembly (see Display Assembly).
11. Remove the palm rest (see Palm Rest).
12. Remove the modem (see Modem).
13. Remove the speaker (see Speaker).
14. Disconnect the fan power cable from the system board.
15. Remove the system board (see System Board).
16. Remove the M2.5 x 5-mm screw that secures the fan to the base.

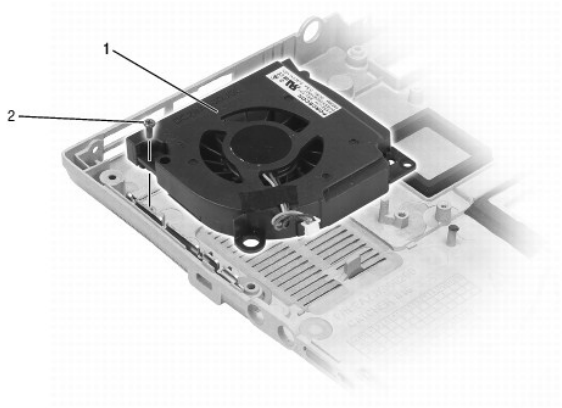

1	fan assembly	2	M2.5 x 5-mm screw

17. Lift the fan assembly out of the base.

Back to Contents Page

Hard Drive

Dell™ Latitude™ D620 Service Manual

NOTE: You need the *Operating System* CD to install the Microsoft® Windows® operating system. You also need the *Drivers and Utilities* CD for your computer to install the drivers and utilities on the new hard drive.

CAUTION: If you remove the hard drive from the computer when the drive is hot, *do not touch* the metal housing of the hard drive.

CAUTION: Before working inside your computer, follow the safety instructions in the *Product Information Guide*.

NOTICE: To prevent data loss, turn off your computer before removing the hard drive. Do not remove the hard drive while the computer is on, in standby mode, or in hibernate mode.

NOTICE: Hard drives are extremely fragile; even a slight bump can damage the drive.

NOTE: Dell does not guarantee compatibility or provide support for hard drives from sources other than Dell.

To replace the hard drive in the hard drive bay:

1. Follow the procedures in Before You Begin.

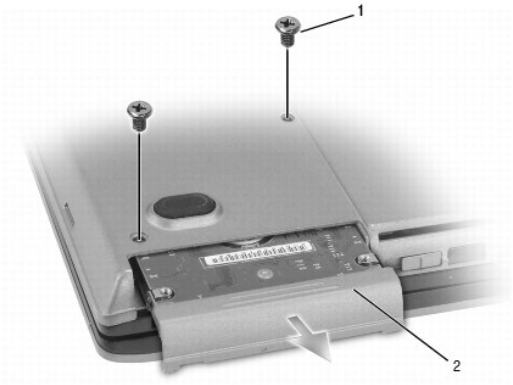

1	screws (2)	2	hard drive

2. Turn the computer over, and remove the two hard drive screws.

NOTICE: When the hard drive is not in the computer, store it in protective antistatic packaging. See "Protecting Against Electrostatic Discharge" in the *Product Information Guide*.

3. Slide the hard drive out of the computer.

4. Remove the new drive from its packaging.

   Save the original packaging for storing or shipping the hard drive.

NOTICE: Use firm and even pressure to slide the drive into place. If you use excessive force, you may damage the connector.

5. Slide the hard drive into the bay until it is fully seated.

6. Replace and tighten the two screws.

7. Use the *Operating System* CD to install the operating system for your computer (see your *User's Guide* for information).

8. Use the *Drivers and Utilities* CD to install the drivers and utilities for your computer (see your *User's Guide* for information).

Back to Contents Page

Back to Contents Page

Hinge Cover

Dell™ Latitude™ D620 Service Manual

CAUTION: Before you begin any of the procedures in this section, follow the safety instructions in the *Product Information Guide*.

NOTICE: To avoid electrostatic discharge, ground yourself by using a wrist grounding strap or by periodically touching an unpainted metal surface (such as a connector on the back of the computer).

NOTICE: The hinge cover is fragile and can be damaged if extreme force is used. Be careful when removing the hinge cover.

1. Follow the procedures in Before You Begin.

2. Turn the computer top-side up, and then open the display all the way (180 degrees) so that the display rests on your work surface.

NOTICE: To avoid damaging the hinge cover, do not lift the cover on both sides simultaneously. Removing the hinge cover in a different way than described may cause the plastic to break.

1	hinge cover	2	plastic scribe	3	indent

3. Starting on the right side of the computer, use a plastic scribe to pry up the hinge cover. Lift the cover away from the computer going from the right toward the left, and lay the cover aside.

Before installing the hinge cover, ensure that all cables are routed correctly. Improper routing of the cables can cause damage to the cables.

4. To replace the hinge cover, insert the left edge of the cover into place.

5. Press from left to right until the cover snaps into place.

Back to Contents Page

Back to Contents Page

Keyboard

Dell™ Latitude™ D620 Service Manual

- Removing the Keyboard
- Replacing the Keyboard

Removing the Keyboard

CAUTION: Before working inside your Dell™ computer, follow the safety instructions in your *Product Information Guide*.

CAUTION: To prevent static damage to components inside your computer, discharge static electricity from your body before you touch any of your computer's electronic components. You can do so by touching an unpainted metal surface.

1. Follow the instructions in Before Working Inside Your Computer.
2. Remove the hinge cover (see Hinge Cover).
3. Remove the three screws at the top of the keyboard.

NOTICE: The keycaps on the keyboard are fragile, easily dislodged, and time-consuming to replace. Be careful when removing and handling the keyboard.

4. Lift the keyboard and rotate it slightly forward to allow access to the keyboard connector on the system board.
5. Disconnect the keyboard cable connector from the system board.

Replacing the Keyboard

NOTICE: To avoid scratching the palm rest when replacing the keyboard, hook the tabs along the front edge of the keyboard into the palm rest, and then secure the keyboard in place.

1. To replace the keyboard, connect the keyboard connector to the system board.
2. Place the tabs along the front edge of the keyboard into the palm rest and lay the keyboard down on the palm rest.
3. Replace the three screws at the top of the keyboard.
4. Replace the hinge cover (see Hinge Cover).

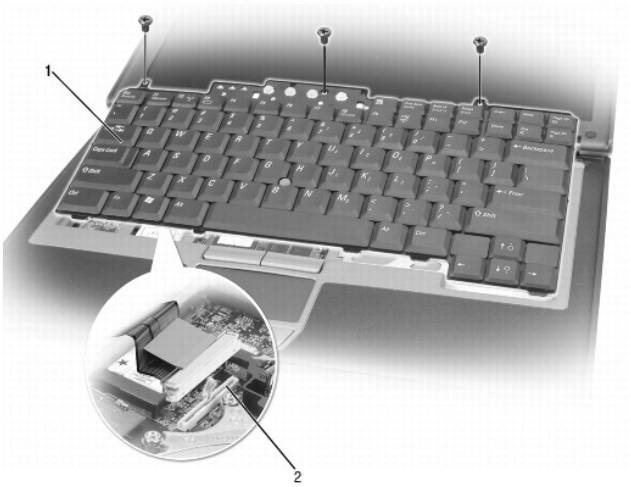

1	keyboard	2	system board connector		

Back to Contents Page

Back to Contents Page

Memory

Dell™ Latitude™ D620 Service Manual

- DIMM A
- DIMM B

CAUTION: Before you begin any of the procedures in this section, follow the safety instructions in the *Product Information Guide*.

NOTICE: If your computer has only one memory module, install the memory module in the connector labeled "DIMMA."

NOTICE: If you remove your original memory modules from the computer during a memory upgrade, keep them separate from any new modules that you may have, even if you purchased the new modules from Dell. If possible, *do not* pair an original memory module with a new memory module. Otherwise, your computer may not function at optimal performance.

NOTE: Memory modules purchased from Dell are covered under your computer warranty.

Your computer has two user-accessible SODIMM sockets, one accessed from beneath the keyboard (DIMM A), and the other accessed from the bottom of the computer (DIMM B).

DIMM A

1. Follow the procedures in Before You Begin.
2. Remove the hinge cover (see Hinge Cover).
3. Remove the keyboard (see Keyboard).

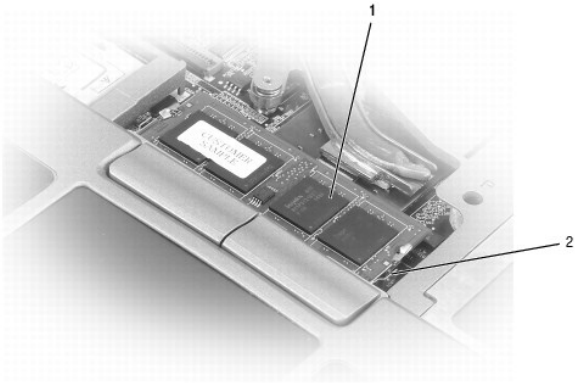

1	memory module (DIMM A)	2	securing clips (2)

NOTICE: To prevent damage to the memory module connector, do not use tools to spread the memory-module securing clips.

4. If you are replacing a memory module, ground yourself and remove the existing module:
   a. Use your fingertips to carefully spread apart the securing clips on each end of the memory module connector until the module pops up.
   b. Remove the module from the connector.

1	securing clips (2 per connector)	2	memory module

5. Ground yourself and install the new memory module:

NOTE: If the memory module is not installed properly, the computer may not boot properly. No error message indicates this failure.

   a. Align the notch in the module connector with the tab in the connector slot.

   b. Slide the module firmly into the slot at a 45-degree angle, and rotate the module down until it clicks into place. If you do not feel the click, remove the module and reinstall it.

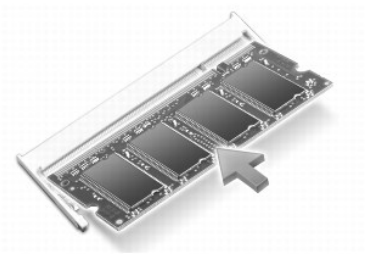

DIMM B

NOTICE: If you need to install memory modules in two connectors, install a memory module in the connector labeled "DIMMA" before you install a module in the connector labeled "DIMMB." Insert memory modules at a 45-degree angle to avoid damaging the connector.

1. Follow the procedures in Before You Begin.

2. Turn the computer bottom-side up, loosen the captive screw in the memory module cover, and then remove the cover.

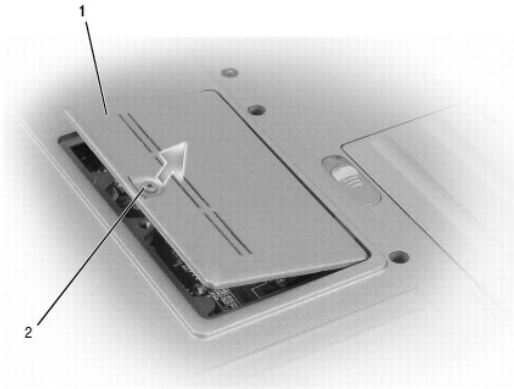

1	memory module cover	2	captive screw

NOTICE: To prevent damage to the memory module connector, do not use tools to spread the memory-module securing clips.

3. If you are replacing a memory module, ground yourself and remove the existing module:

   a. Use your fingertips to carefully spread apart the securing clips on each end of the memory module connector until the module pops up.

   b. Remove the module from the connector.

1	securing clips (2 per connector)	2	memory module

NOTICE: Insert memory modules at a 45-degree angle to avoid damaging the connector.

4. Ground yourself and install the new memory module:

NOTE: If the memory module is not installed properly, the computer may not boot properly. No error message indicates this failure.

   a. Align the notch in the module edge connector with the tab in the connector slot.

   b. Slide the module firmly into the slot at a 45-degree angle, and rotate the module down until it clicks into place. If you do not feel the click, remove the module and reinstall it.

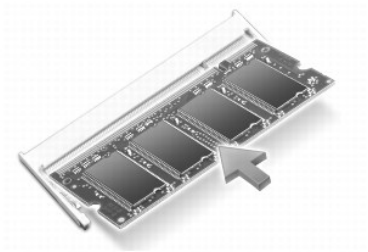

5. Replace the memory module cover.

NOTICE: If the cover is difficult to close, remove the module and reinstall it. Forcing the cover to close may damage your computer.

6. Insert the battery into the battery bay, or connect the AC adapter to your computer and an electrical outlet.

7. Turn on the computer.

   As the computer boots, it detects the additional memory and automatically updates the system configuration information.

   To confirm the amount of memory installed in the computer, click **Start**→ **Help and Support**→ **Use Tools to view your computer information and diagnose problems**→ **My Computer Information**.

Back to Contents Page

Back to Contents Page

Communications Cards

Dell™ Latitude™ D620 Service Manual

- Wireless Local Area Network (WLAN) Card
- Mobile Broadband Card
- Subscriber Identity Module (SIM) Card

Wireless Local Area Network (WLAN) Card

If you ordered a WLAN card with your computer, the card is already installed.

CAUTION: Before you begin any of the procedures in this section, follow the safety instructions in the *Product Information Guide*.

1. Follow the procedures in Before You Begin.
2. Remove the hinge cover (see Hinge Cover).
3. Remove the keyboard (see Keyboard).

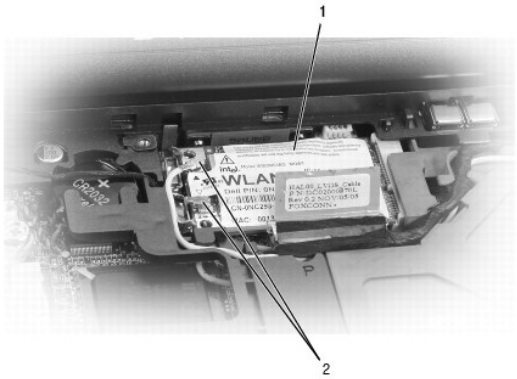

1	WLAN card	2	antenna cables (2)

NOTICE: To prevent damage to the connector, do not use tools to spread the securing clips.

4. If a WLAN card is not already installed, go to step 5. If you are replacing a WLAN card, remove the existing card:
   a. Disconnect the WLAN card from any attached cables.
   b. Use your fingertips to carefully spread apart the metal securing tabs until the card pops up slightly.
   c. Slide and lift the WLAN card out of its connector.

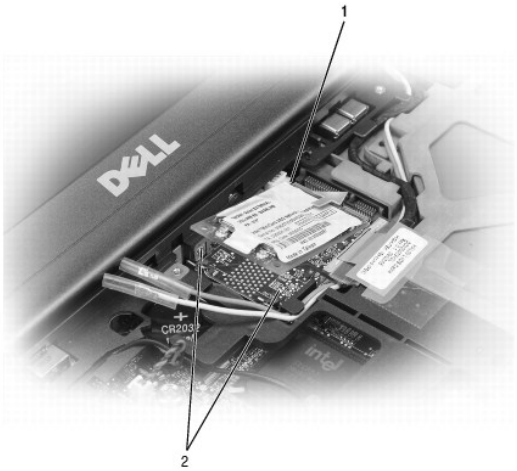

1	WLAN card	2	metal securing tabs (2)

NOTICE: The connectors are keyed to ensure correct insertion. If you feel resistance, check the connectors and realign the card.

NOTE: Do not insert a Mobile Broadband card into the WLAN card slot.

5. To install a WLAN card:
   a. Move any antenna cables out of the way to make space for the WLAN card.
   b. Align the WLAN card with the connector at a 45-degree angle, and press the card into the connector until you feel a click.

1	WLAN card	2	antenna cable connectors

NOTICE: To avoid damaging the WLAN card, never place cables on top of or under the card.

NOTE: Your WLAN card may have two or three antenna cable connectors, depending on the type of card you ordered.

NOTE: For more specific information about which cable to connect to which connector, see the documentation that came with your WLAN card.

   c. Connect the antenna cables to the WLAN card, ensuring that you route the cables correctly.

Mobile Broadband Card

If you ordered a Mobile Broadband card with your computer, the card is already installed.

CAUTION: Before you begin any of the procedures in this section, follow the safety instructions in the *Product Information Guide*.

1. Follow the procedures in Before You Begin.

2. Remove the hinge cover (see Hinge Cover).

3. Remove the keyboard (see Keyboard).

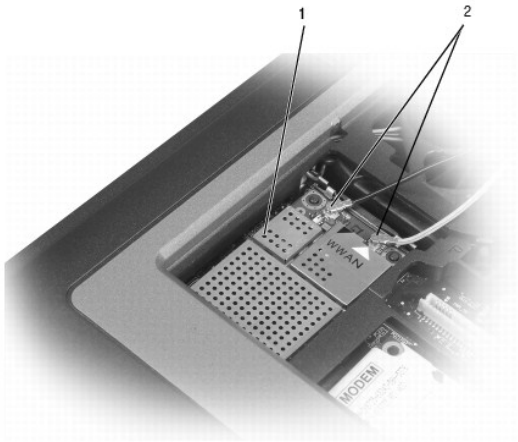

1	Mobile Broadband card	2	antenna wires (2)

NOTICE: To prevent damage to the connector, do not use tools to spread the securing clips.

4. If a Mobile Broadband card is not already installed, go to step 5. If you are replacing a Mobile Broadband card, remove the existing card:
   a. Disconnect the Mobile Broadband card from any attached cables.

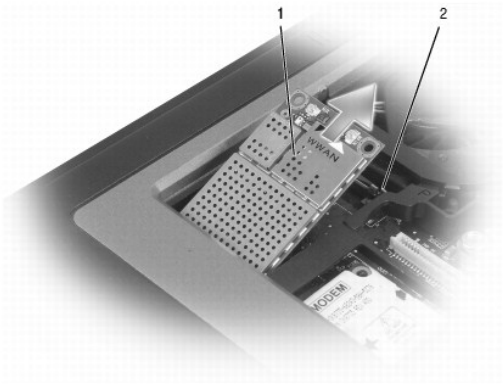

1	Mobile Broadband card	2	metal securing tabs (2)

   b. Use your fingertips to carefully spread apart the metal securing tabs until the card pops up slightly.
   c. Slide and lift the Mobile Broadband card out of its connector.

NOTICE: The connectors are keyed to ensure correct insertion. If you feel resistance, check the connectors and realign the card.

NOTE: Do not insert a WLAN card into the Mobile Broadband card slot.

NOTICE: The Mobile Broadband card may have one or two connectors, depending on the type of card you ordered.

5. To install a Mobile Broadband card:
   a. Move any antenna cables out of the way to make space for the Mobile Broadband card.
   b. Align the card with the connector at a 45-degree angle, and press the card into the connector until you feel a click.

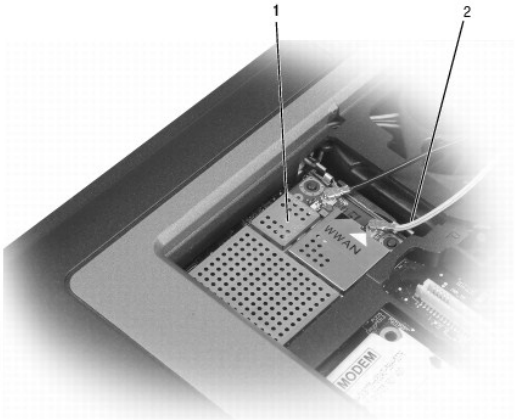

1	Mobile Broadband card	2	antenna wires (2)

NOTICE: To avoid damaging the Mobile Broadband card, never place cables on top of or under the card.

NOTE: For more specific information about which cable to connect to which connector, see the documentation that came with your Mobile Broadband card.

6. Connect the antenna cable or cables to the Mobile Broadband card, ensuring that you route the cables correctly.

Subscriber Identity Module (SIM) Card

CAUTION: Before you begin any of the procedures in this section, follow the safety instructions in the *Product Information Guide*.

1. Follow the procedures in Before You Begin.

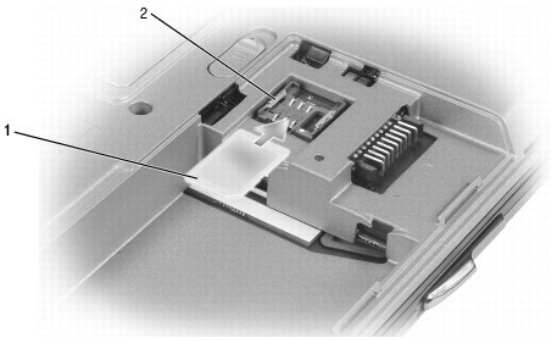

1	SIM card	2	metal brackets (2)

NOTICE: Do not touch the SIM card connectors to protect the card from electrostatic discharge (ESD). To prevent ESD, hold the card in your hand before you insert or remove the card.

2. With the cut-off corner on the card facing away from the card compartment, insert the SIM card into the compartment so that it slides under the metal tabs on the sides.

Back to Contents Page

Back to Contents Page

Modem

Dell™ Latitude™ D620 Service Manual

CAUTION: Before you begin the following procedure, see the safety instructions in the *Product Information Guide*.

NOTICE: To avoid damaging the system board, you must remove the main battery before you begin working inside the computer (see Before Working Inside Your Computer).

CAUTION: To prevent static damage to components inside your computer, discharge static electricity from your body before you touch any of your computer's electronic components. You can do so by touching an unpainted metal surface.

1. Follow the instructions in Before Working Inside Your Computer.
2. Remove the hinge cover (see Hinge Cover).
3. Remove the optical drive (see Media Bay Devices).
4. Remove the keyboard (see Keyboard).
5. Remove the coin-cell battery (see Coin-Cell Battery).
6. Remove the display assembly (see Display Assembly).
7. Remove the palm rest (see Palm Rest).
8. Remove the M2 x 3-mm screw that attaches the modem to the system board.
9. Pull up on the pull-tab to disconnect the modem from the connector on the system board.

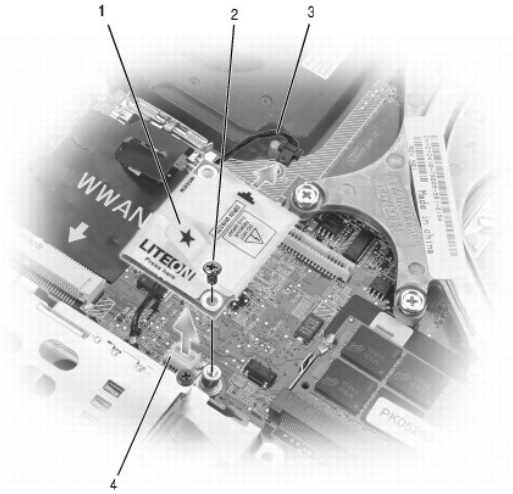

1	modem pull-tab	2	M2 x 3-mm screw	3	modem cable
4	system board connector				

NOTICE: Do not disconnect the modem cable from the system board.

10. Disconnect the modem cable from the modem.

Back to Contents Page

Back to Contents Page

Microphone

Dell™ Latitude™ D620 Service Manual

CAUTION: Before performing the following procedures, follow the safety instructions in the *Product Information Guide*.

CAUTION: To prevent static damage to components inside your computer, discharge static electricity from your body before you touch any of your computer's electronic components. You can do so by touching an unpainted metal surface.

1. Follow the instructions in Before Working Inside Your Computer.
2. Remove the hinge cover (see Hinge Cover).
3. Remove the optical drive (see Media Bay Devices).
4. Remove the keyboard (see Keyboard).
5. Remove the coin-cell battery (see Coin-Cell Battery).
6. Remove the palm rest (see Palm Rest).
7. Disconnect the microphone board from the system board.

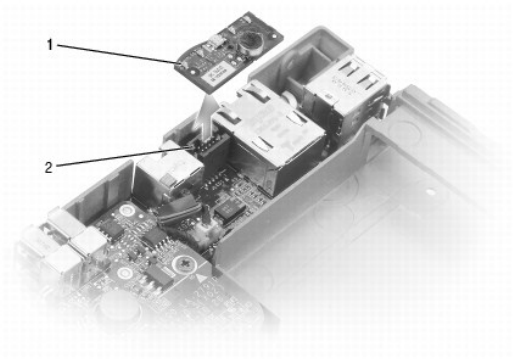

Back to Contents Page

Back to Contents Page

Media Bay Devices

Dell™ Latitude™ D620 Service Manual

NOTE: If the device security screw is not present, you can remove and install devices while the computer is running and connected to a docking device (docked).

NOTICE: To prevent damage to devices, store them in a safe, dry place when they are not installed in the computer. Avoid pressing down on them or placing heavy objects on top of them.

1. If present, remove the device security screw from the bottom of the computer.

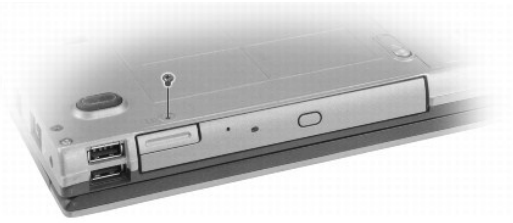

2. If the computer is running, double-click the **Safely Remove Hardware** icon on the taskbar, click the device you want to eject, and click **Stop**.

3. Press the device latch release.

4. Pull the device out of the media bay.

To install a device, push the new device into the bay until it clicks into place.

Back to Contents Page

Back to Contents Page

Palm Rest

Dell™ Latitude™ D620 Service Manual

CAUTION: Before performing the following procedures, follow the safety instructions in the *Product Information Guide*.

CAUTION: To prevent static damage to components inside your computer, discharge static electricity from your body before you touch any of your computer's electronic components. You can do so by touching an unpainted metal surface.

1. Follow the instructions in Before Working Inside Your Computer.
2. Remove the hinge cover (see Hinge Cover).
3. Remove any devices installed in the media bay (see Media Bay Devices).
4. Remove the keyboard (see Keyboard).
5. Remove the display assembly (see Display Assembly).
6. Remove the internal card with Bluetooth® wireless technology (see Internal Card with Bluetooth® Wireless Technology).
7. Remove the coin-cell battery (see Coin-Cell Battery).
8. Remove the three screws labeled "P" from the top of the palm rest.
9. Turn the computer upside-down.
10. Remove the hard drive (see Hard Drive).
11. Loosen the two captive screws located at the front of the hard drive bay.

12. Remove the seven M2.5 x 8-mm screws from the bottom of the computer.

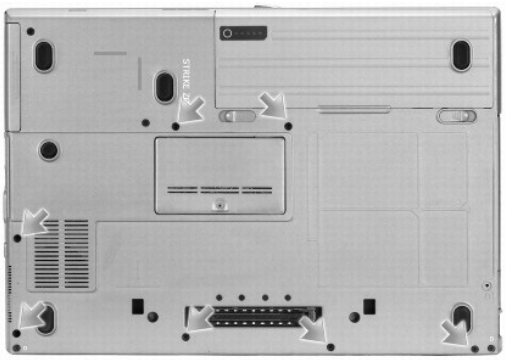

NOTICE: Carefully separate the palm rest from the base plastics to avoid damage to the palm rest.

13. Remove the palm rest.
    a. Starting at the back center of the palm rest, use your fingers to separate the palm rest from the base plastics by lifting the inside edge of the palm rest.
    b. After the back of the palm rest is unsnapped, push the palm rest forward to unhook the remainder of the palm rest from the front of the base.
14. Disconnect the touch pad connector from the system board.

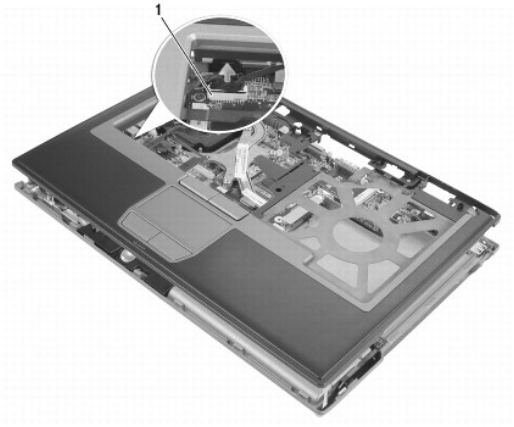

1	touch pad connector

Back to Contents Page

Back to Contents Page

PC Card Reader

Dell™ Latitude™ D620 Service Manual

CAUTION: Before performing the following procedures, follow the safety instructions in the *Product Information Guide*.

CAUTION: To prevent static damage to components inside your computer, discharge static electricity from your body before you touch any of your computer's electronic components. You can do so by touching an unpainted metal surface.

1. Follow the instructions in Before Working Inside Your Computer.
2. Remove the hinge cover (see Hinge Cover).
3. Remove the optical drive (see Media Bay Devices).
4. Remove the keyboard (see Keyboard).
5. Remove the coin-cell battery (see Coin-Cell Battery).
6. Remove the palm rest (see Palm Rest).
7. Remove the four M2 x 3-mm screws that secure the PC Card reader to the computer.

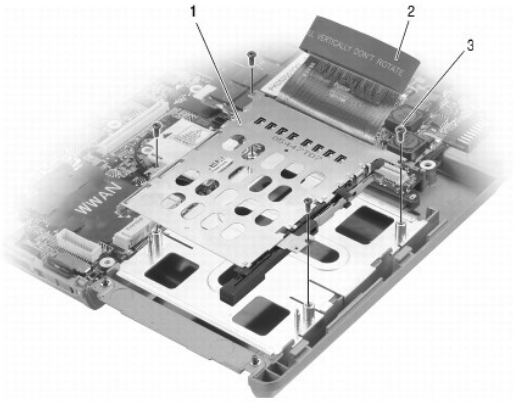

8. Use the pull-tab to disconnect the PC Card reader connector from the system board.

Back to Contents Page

Back to Contents Page

Speaker

Dell™ Latitude™ D620 Service Manual

CAUTION: Before performing the following procedures, follow the safety instructions in the *Product Information Guide*.

CAUTION: To prevent static damage to components inside your computer, discharge static electricity from your body before you touch any of your computer's electronic components. You can do so by touching an unpainted metal surface.

1. Follow the instructions in Before Working Inside Your Computer.
2. Remove the hinge cover (see Hinge Cover).
3. Remove the optical drive (see Media Bay Devices).
4. Remove the keyboard (see Keyboard).
5. Remove the coin-cell battery (see Coin-Cell Battery).
6. Remove the palm rest (see Palm Rest).
7. Disconnect the speaker connector from the system board.

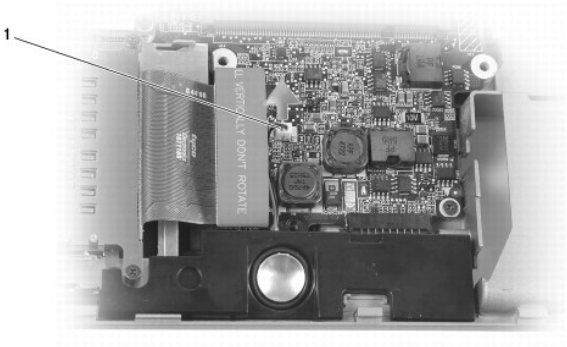

1	speaker connector

NOTICE: Handle the speakers with care to avoid damaging them.

8. Pull the speaker straight up and out of the base plastics.

Back to Contents Page

Back to Contents Page

System Board

Dell™ Latitude™ D620 Service Manual

- Removing the System Board
- Installing the System Board

Removing the System Board

CAUTION: Before performing the following procedures, follow the safety instructions in the *Product Information Guide*.

CAUTION: To prevent static damage to components inside your computer, discharge static electricity from your body before you touch any of your computer's electronic components. You can do so by touching an unpainted metal surface.

The system board's BIOS chip contains the Service Tag, which is also visible on a barcode label on the bottom of the computer. The replacement kit for the system board includes a CD that provides a utility for transferring the Service Tag to the replacement system board.

1. Follow the instructions in Before Working Inside Your Computer.
2. Remove the hinge cover (see Hinge Cover).
3. Remove the keyboard (see Keyboard).
4. Remove the display assembly (see Display Assembly).
5. Remove the hard drive (see Hard Drive).
6. Remove the optical drive (see Media Bay Devices).
7. Remove the memory module (see Memory).
8. Remove and installed wireless communications cards (see Communications Cards).
9. Remove the palm rest (see Palm Rest).
10. Remove the modem (see Modem).
11. Remove the speaker (see Speaker).
12. Remove the PC Card reader (see PC Card Reader).
13. Remove the processor thermal-cooling assembly (see Processor Thermal-Cooling Assembly).
14. Remove the processor (see Processor Module).
15. Remove the microphone (see Microphone.)
16. Disconnect the fan cable from the system board.
17. Disconnect the cables near the WLAN card and the modem connector from the system board.
18. Remove the three M2.5 x 5-mm system board screws from the bottom of the computer.

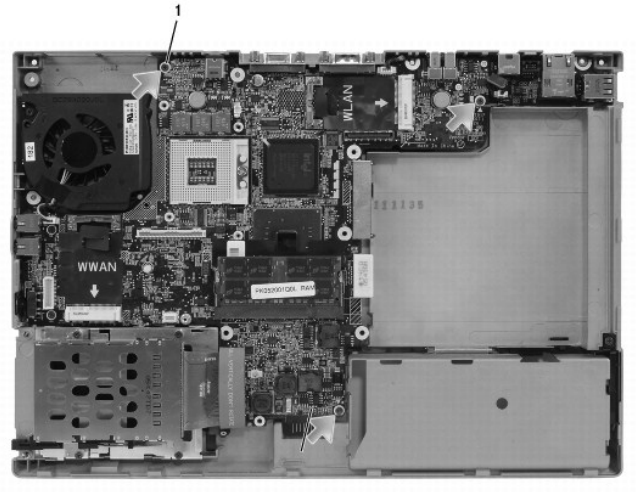

		1	M2.5 x 5-mm screws (5)		

19. Remove the four 5-mm hex screws on the back of the computer.

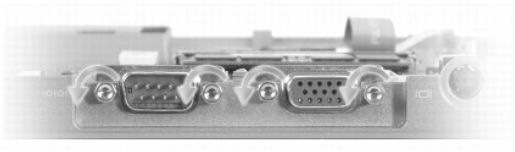

20. Lift the system board out and away from the base plastics.

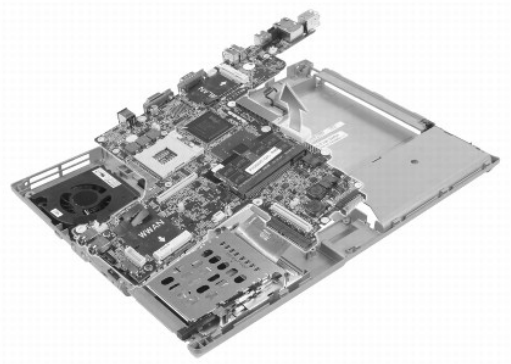

Installing the System Board

1. Perform all the steps in Removing the System Board in reverse order.

NOTE: When installing the system board, ensure that you align the wireless switch on the base with the switch on the system board.

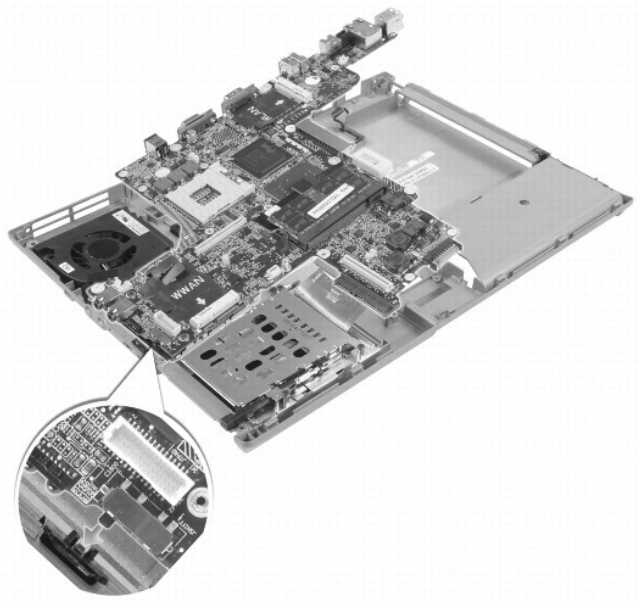

2. Insert the battery into the battery bay. See Before Working Inside Your Computer.

3. Connect the AC adapter to the computer and to an electrical outlet.

NOTICE: Before turning on the computer, replace all screws and ensure that no stray screws remain inside the computer. Failure to do so may result in damage to the computer.

4. Turn on the computer.

NOTE: After replacing the system board, enter the computer Service Tag into the BIOS of the replacement system board.

5. Insert the CD that accompanied the replacement system board into the appropriate drive. Follow the instructions on the screen.

Back to Contents Page

Back to Contents Page

System Components

Dell™ Latitude™ D620 Service Manual

CAUTION: Only a certified service technician should perform repairs on your computer. Damage due to servicing that is not authorized by Dell is not covered by your warranty.

NOTICE: Unless otherwise noted, each procedure in this document assumes that a part can be replaced by performing the removal procedure in reverse order.

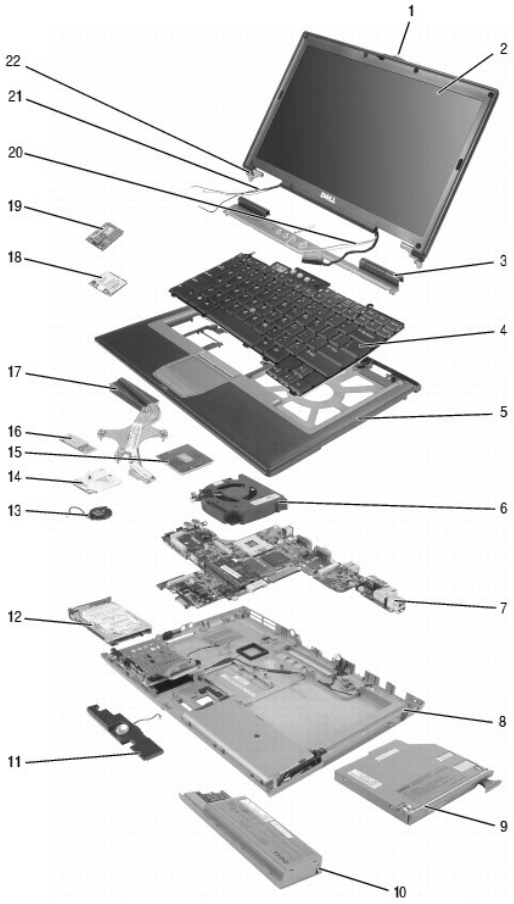

1	display latch
2	display
3	hinge cover
4	keyboard
5	palm rest
6	fan assembly
7	system board
8	base plastics
9	optical drive
10	battery
11	speaker
12	hard drive
13	coin-cell battery
14	modem
15	processor
16	internal card with Bluetooth® wireless technology

17	processor thermal-cooling assembly
18	Mobile Broadband card
19	WLAN card
20	display-feed flex cable
21	antenna cables
22	display hinge

Back to Contents Page

Back to Contents Page

Processor Thermal-Cooling Assembly

Dell™ Latitude™ D620 Service Manual

- Removing the Processor Thermal-Cooling Assembly
- Replacing the Processor Thermal-Cooling Assembly

Removing the Processor Thermal-Cooling Assembly

CAUTION: Before performing the following procedures, follow the safety instructions in the *Product Information Guide*.

CAUTION: To prevent static damage to components inside your computer, discharge static electricity from your body before you touch any of your computer's electronic components. You can do so by touching an unpainted metal surface.

1. Follow the instructions in Before Working Inside Your Computer.
2. Remove the hinge cover (see Hinge Cover).
3. Remove the optical drive (see Media Bay Devices).
4. Remove the keyboard (see Keyboard).
5. Remove the coin-cell battery (see Coin-Cell Battery).
6. Remove the palm rest (see Palm Rest).

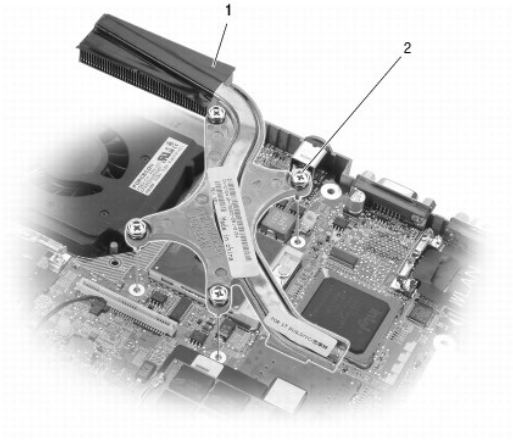

1	processor thermal-cooling assembly	2	captive screws (4)		

NOTE: The processor thermal-cooling assembly may differ in appearance, depending on your computer configuration. However, the removal procedure is the same for all assemblies.

7. Loosen in consecutive order the four captive screws, labeled "1" through "4," on the assembly.
8. Lift the assembly out of the computer.

Replacing the Processor Thermal-Cooling Assembly

CAUTION: Before performing the following procedures, follow the safety instructions in the *Product Information Guide*.

NOTE: To prevent static damage to components inside your computer, discharge static electricity from your body before you touch any of your computer's electronic components. You can do so by touching an unpainted metal surface.

1. Remove the processor thermal-cooling assembly (see Processor Thermal-Cooling Assembly).

NOTE: The original pad can be reused if the original processor and heat sink are reinstalled together. If either the processor or heat sink is replaced, use the thermal pad provided in the kit to ensure that thermal conductivity is achieved.

2. Peel the backing off the thermal cooling pad and adhere the pad to the portion of the thermal-cooling assembly that covers the processor.
3. Place the assembly on the system board.
4. Tighten in consecutive order the four captive screws, labeled "1" through "4," on the thermal-cooling assembly.
5. Replace the palm rest (see Palm Rest).
6. Replace the coin-cell battery (see Coin-Cell Battery).
7. Replace the keyboard (see Keyboard).
8. Replace the optical drive (see Media Bay Devices).
9. Replace the hinge cover (see Hinge Cover).
10. Replace the battery.

Back to Contents Page

Back to Contents Page

Dell™ Latitude™ D620 Service Manual

NOTE: A NOTE indicates important information that helps you make better use of your computer.

NOTICE: A NOTICE indicates either potential damage to hardware or loss of data and tells you how to avoid the problem.

CAUTION: A CAUTION indicates a potential for property damage, personal injury, or death.

Information in this document is subject to change without notice.
© 2006 Dell Inc. All rights reserved.

Reproduction in any manner whatsoever without the written permission of Dell Inc. is strictly forbidden.

Trademarks used in this text: *Dell*, the *DELL* logo, and *Latitude* are trademarks of Dell Inc.; *Microsoft* and *Windows* are registered trademarks of Microsoft Corporation; *Bluetooth* is a registered trademark owned by Bluetooth SIG, Inc. and is used by Dell under license;

Other trademarks and trade names may be used in this document to refer to either the entities claiming the marks and names or their products. Dell Inc. disclaims any proprietary interest in trademarks and trade names other than its own.

November 2006 Rev. A01

Back to Contents Page